ASSEMBLY INSTRUCTIONS

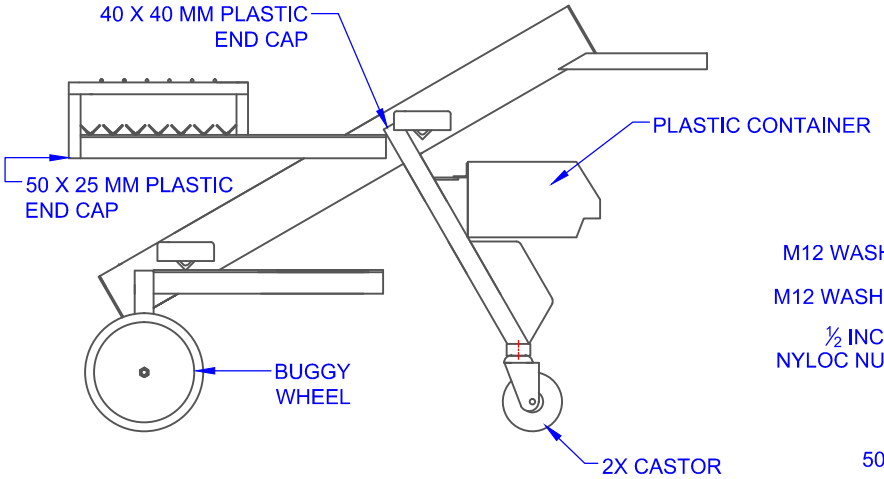

SIDE VIEW

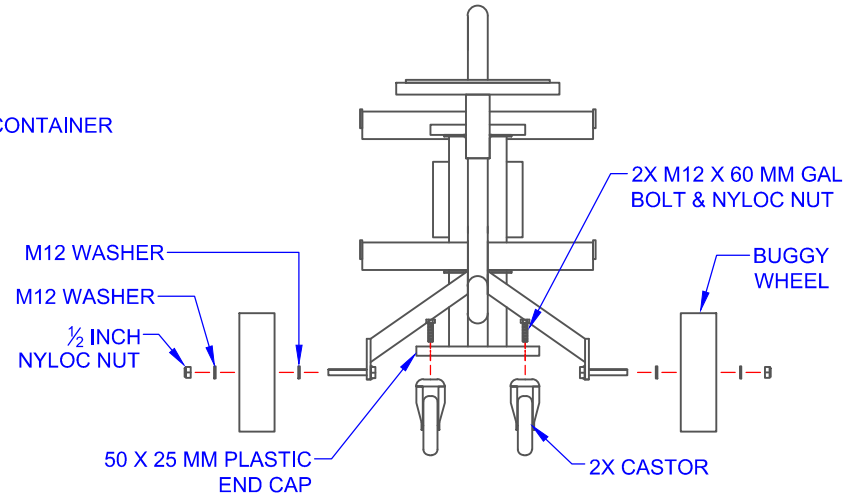

REAR VIEW

COMPONENTS

QTY	ITEM
1	TDS95 TROLLEY FRAME
2	250 MM DIA. SLICK BUGGY WHEEL
2	150 MM DIA. WHEEL ON CASTOR
2	40 X 40 MM PLASTIC END CAP
3	50 X 25 MM PLASTIC END CAP
1	PLASTIC CONTAINER
2	M10 X 60 MM GAL BOLT & NYLOC NUT
2	½ INCH NYLOC NUT
4	M12 WASHER
-	-
-	-
-	-
-	-
-	-

TITLE:
TDS95 MULTI-PURPOSE TROLLEY ASSEMBLY

DRAWING NUMBER:
TDS95 ASSEMBLY

WEIGHT:	CUBIC MEASURE
-	-

Oz Ring Pty Ltd
Trading as:
Play Hard Sports Equipment
ABN 79 066 094 559
24 Ern Harley Drive
Burleigh Heads Qld 4220
Phone: (07) 5593 4494
Fax: (07) 5593 4338
Website: www.playhardsports.com.au
Email: email@playhardsports.com.au