PRODUCT SPECIFICATIONS:
PVC FOAM 20 MM THICK WHITE
EIGHT PIECE CIRCLE WITH JIGSAW FIT

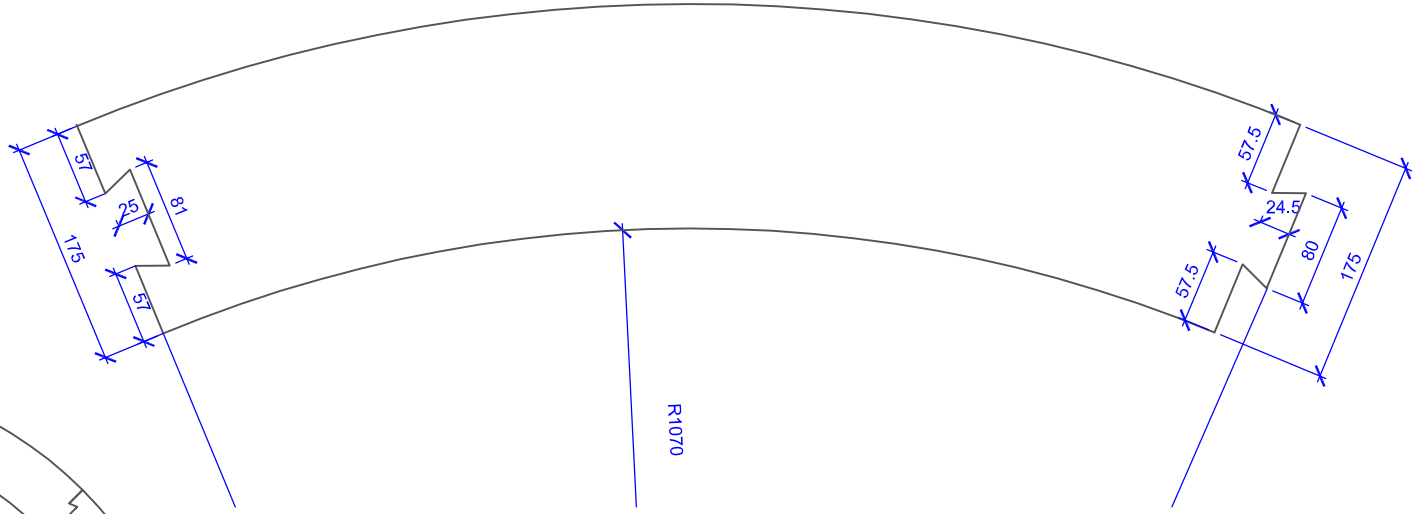

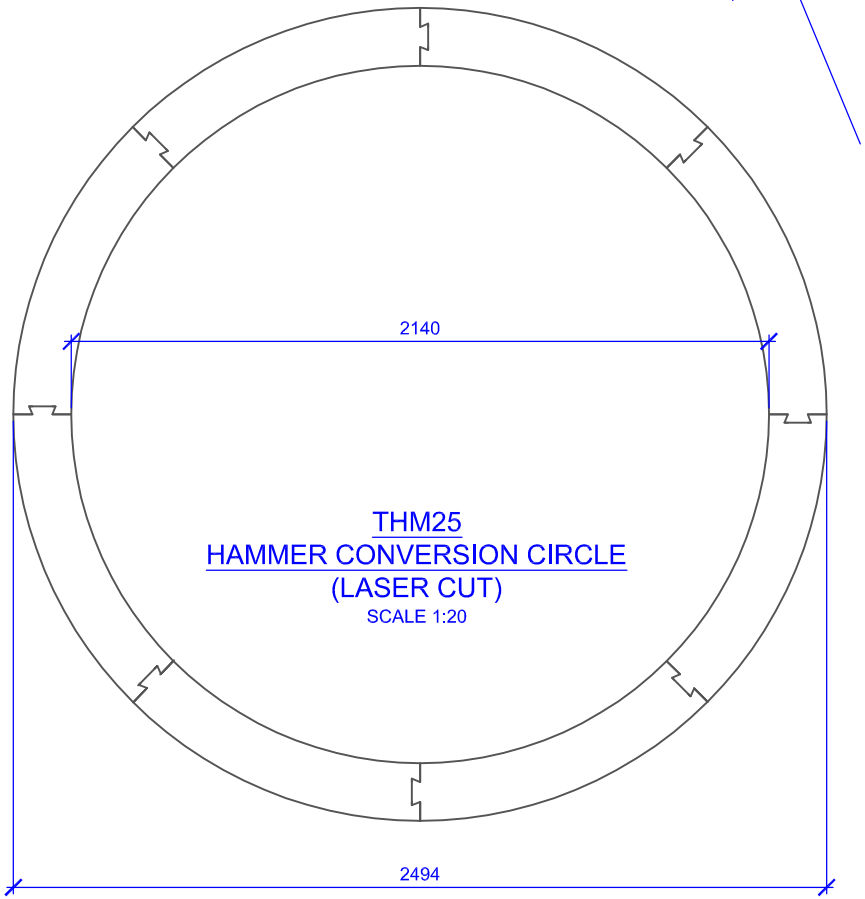

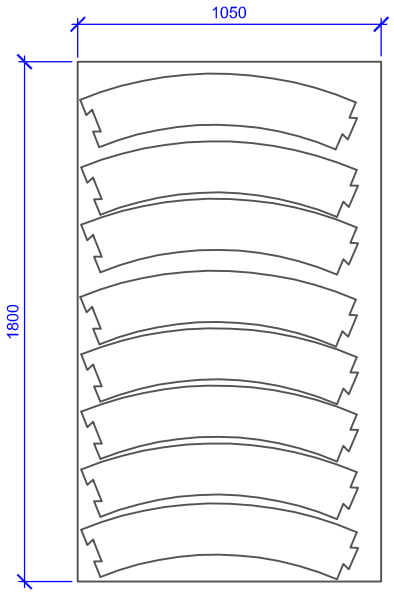

TITLE: THM25 HAMMER CONVERSION CIRCLE	
DRAWN BY: TB	DRAWING NUMBER: THM25
DATE: 14/01/15	REVISION: A4

Oz Ring Pty Ltd
Trading as:
Play Hard Sports Equipment
ABN 79 066 094 559
24 Ern Harley Drive
Burleigh Heads Qld 4220
Phone: (07) 5593 4494
Fax: (07) 5593 4338
Website: www.playhardsports.com.au
Email: email@playhardsports.com.au