ASSEMBLY INSTRUCTIONS

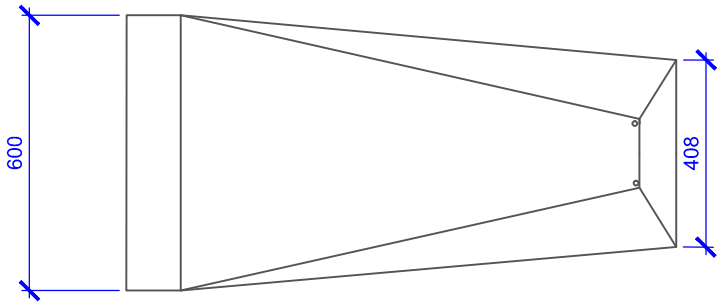

TOP VIEW

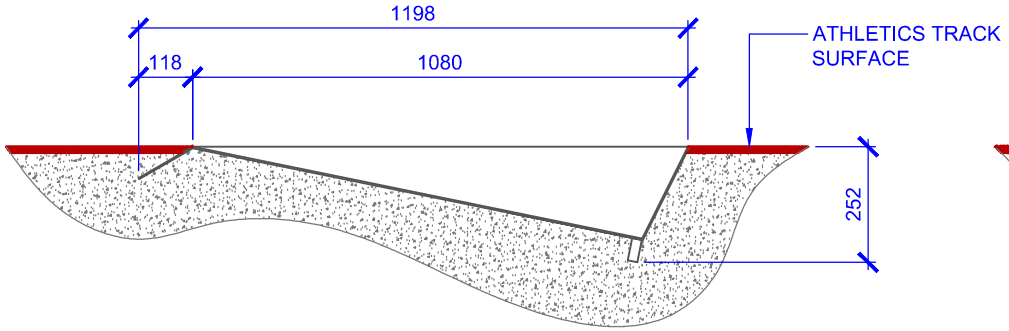

SIDE VIEW

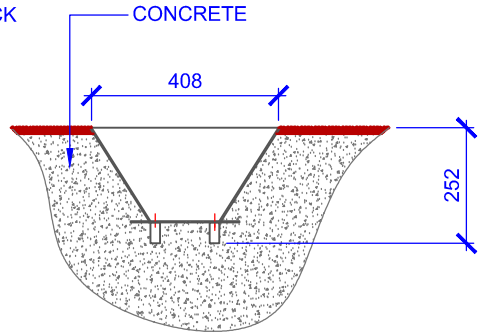

FRONT VIEW

TPV15 POLE VAULT TROUGH

COMPONENTS

QTY	ITEM
1	TPV15 TROUGH
-	-
-	-
-	-
-	-
-	-
-	-
-	-
-	-
-	-
-	-
-	-
-	-
-	-
-	-

TITLE:
TPV15
POLE VAULT TROUGH

DRAWING NUMBER:
TPV15 ASSEMBLY

WEIGHT:	CUBIC MEASURE
-	-

Oz Ring Pty Ltd
Trading as:
Play Hard Sports Equipment
ABN 79 066 094 559
24 Ern Harley Drive
Burleigh Heads Qld 4220
Phone: (07) 5593 4494
Fax: (07) 5593 4338
Website: www.playhardsports.com.au
Email: email@playhardsports.com.au