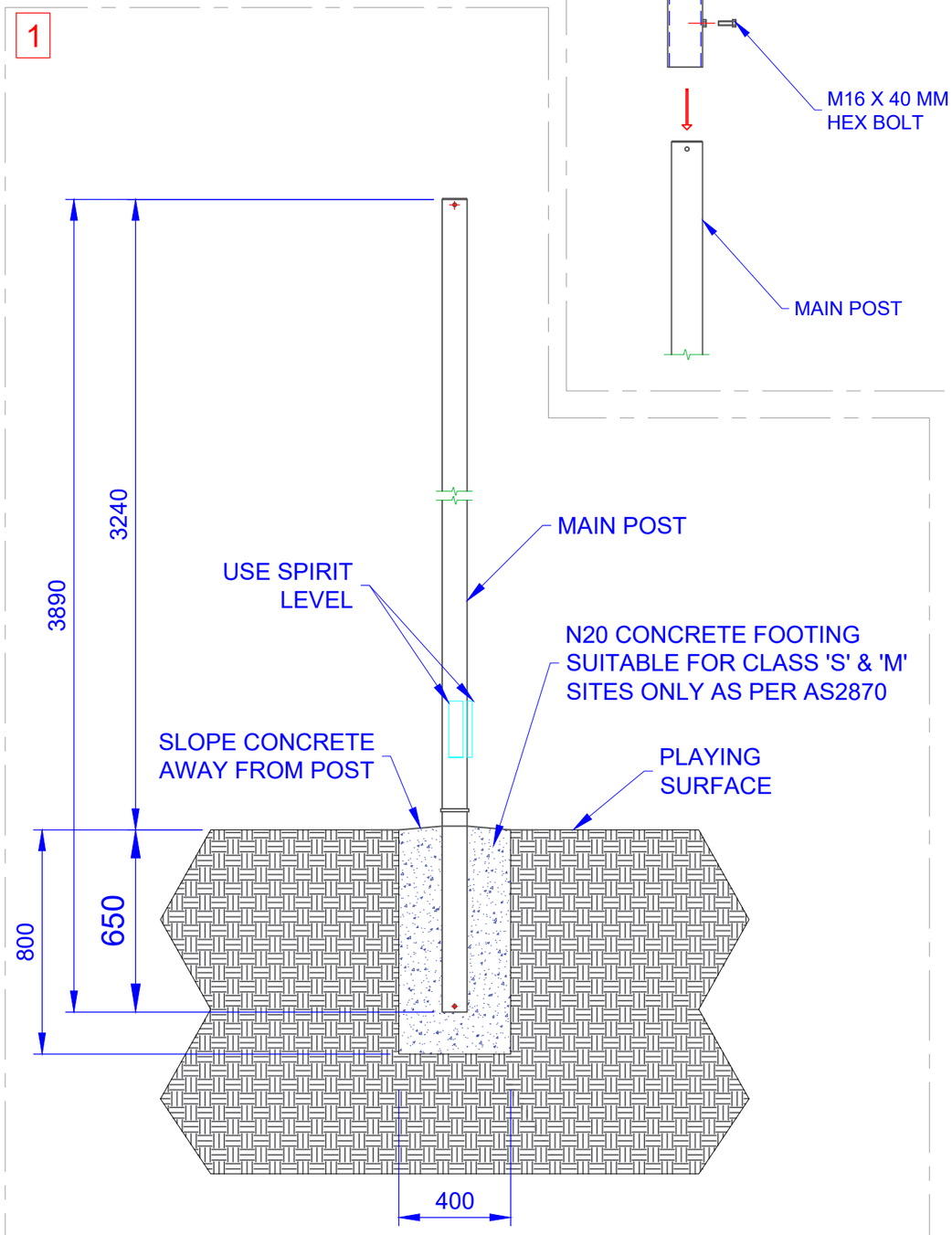

LEGEND BASKETBALL TOWER WITH SLEEVE
SCALE 1:20

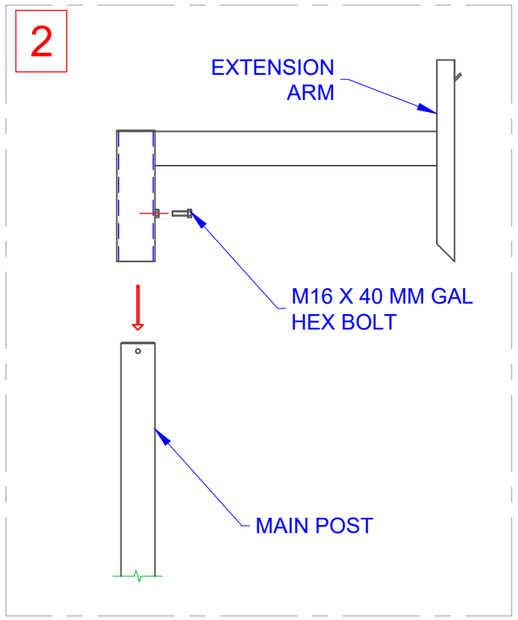

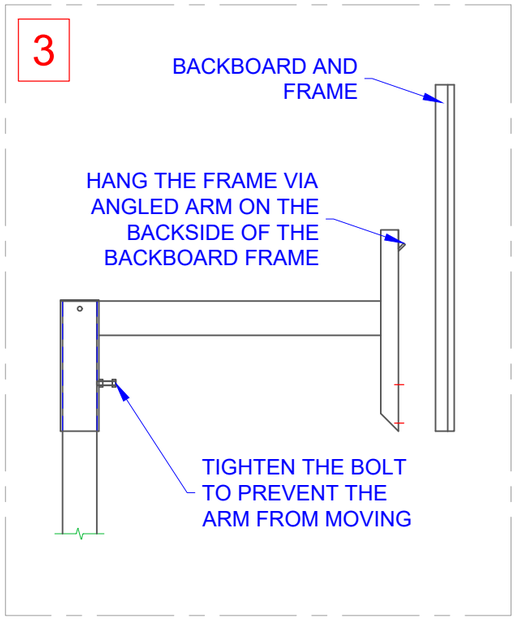

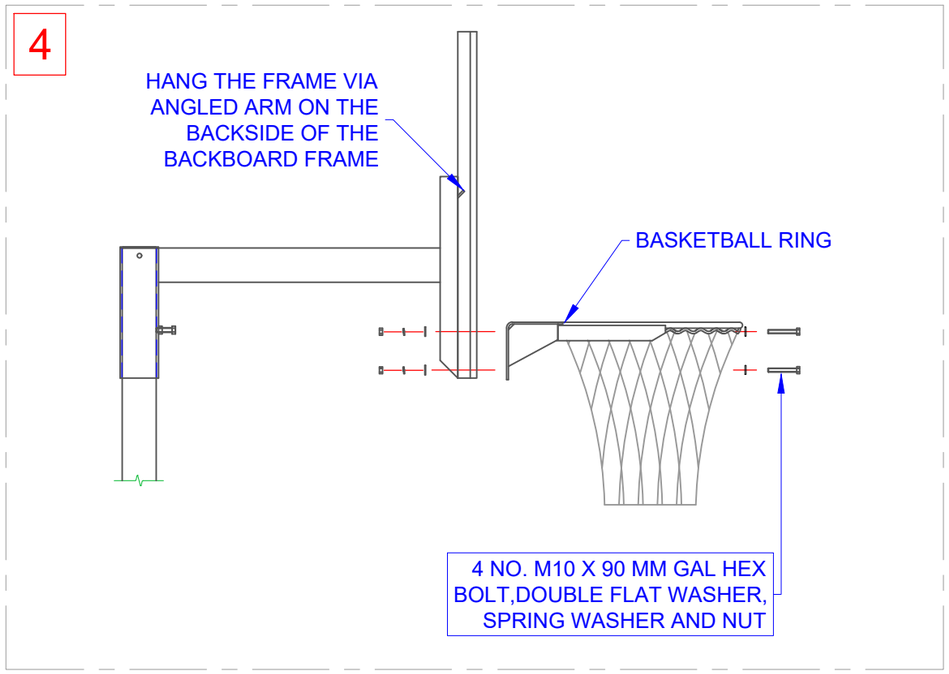

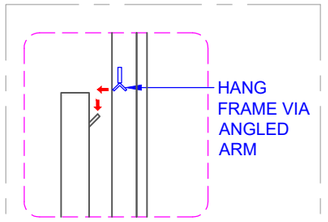

DETAIL
SCALE 1:10

COMPONENTS

QTY	ITEM
1	MAIN POST
1	EXTENSION ARM
1	BACKBOARD AND FRAME
1	RING, CORD AND NET
4	M10 X 90 MM BOLT, DOUBLE FLAT WASHER, SPRING WASHER & NUT
1	M16 X 40 MM GAL HEX HEAD BOLT

TITLE:
LEGEND BASKETBALL TOWER ON SLEEVE
ASSEMBLY INSTRUCTIONS 1 OF 2

DRAWING NUMBER: LEGEND	DRAWN BY: UMESH
CHECKED BY: -	DATE: 02/05/2024

PLAY HARD sports equipment

Oz Ring Pty Ltd
Trading as:
Play Hard Sports Equipment
ABN 79 066 094 559
13 Alex Fisher Drive
Burleigh Heads Qld 4220
Phone: (07) 5593 4494
Fax: (07) 5593 4338
Website: www.playhardsports.com.au
Email: email@playhardsports.com.au